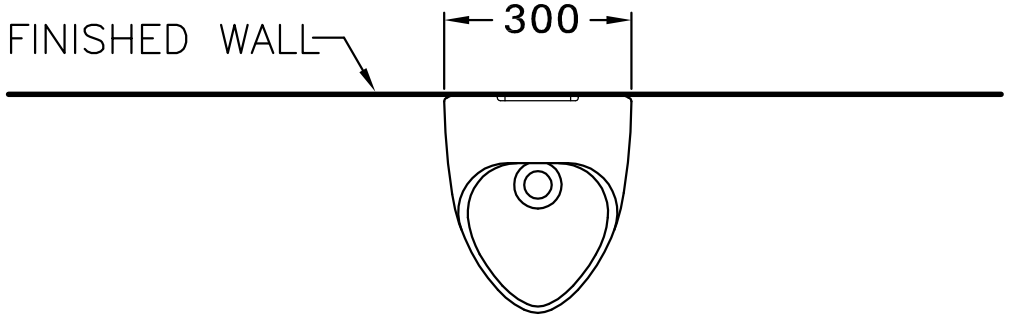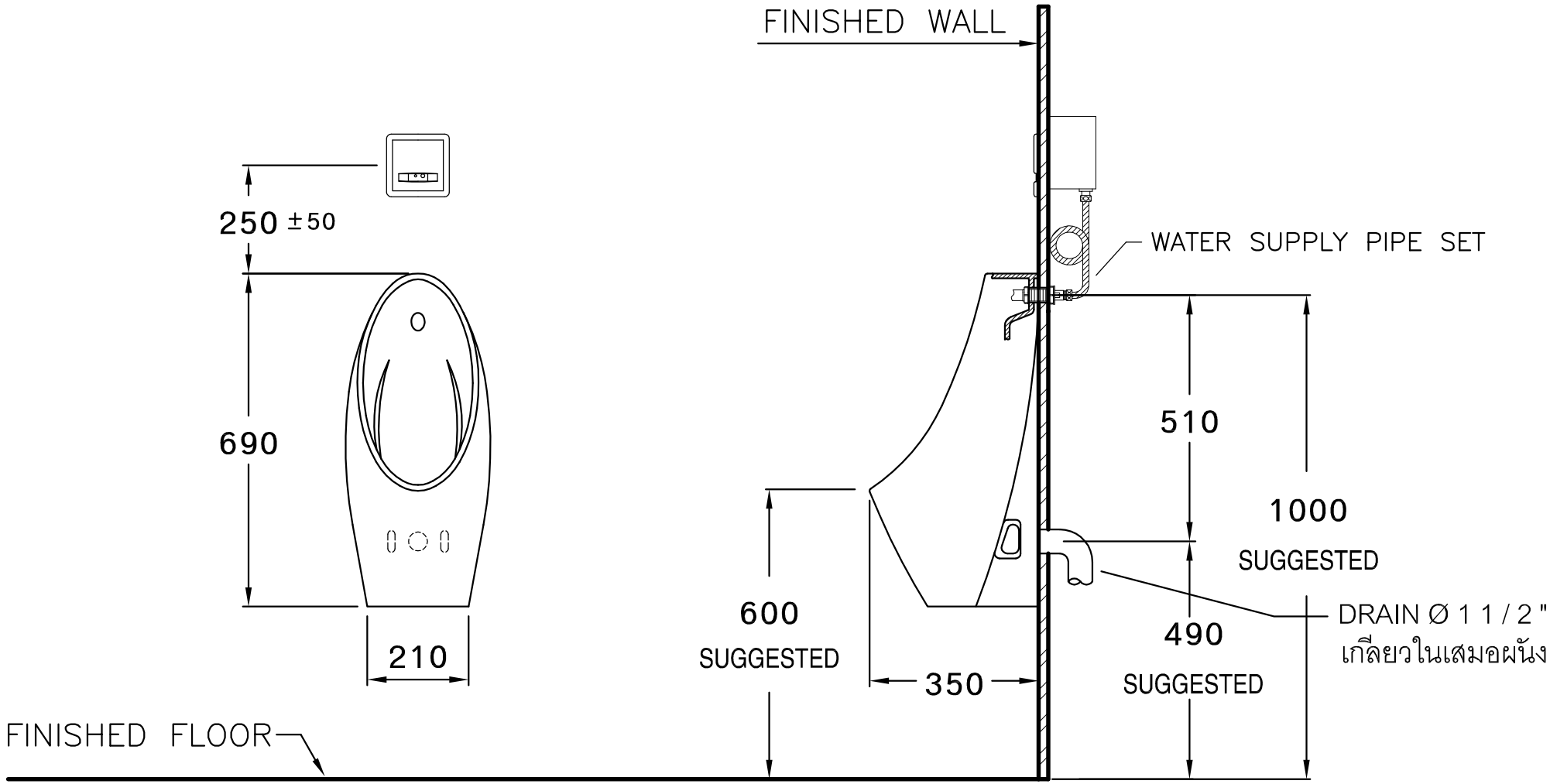DRAWING FOR CATALOG	
NAME	New Urinal (Spreader)
CODE	C-3020 BI
DATE	27/09/57