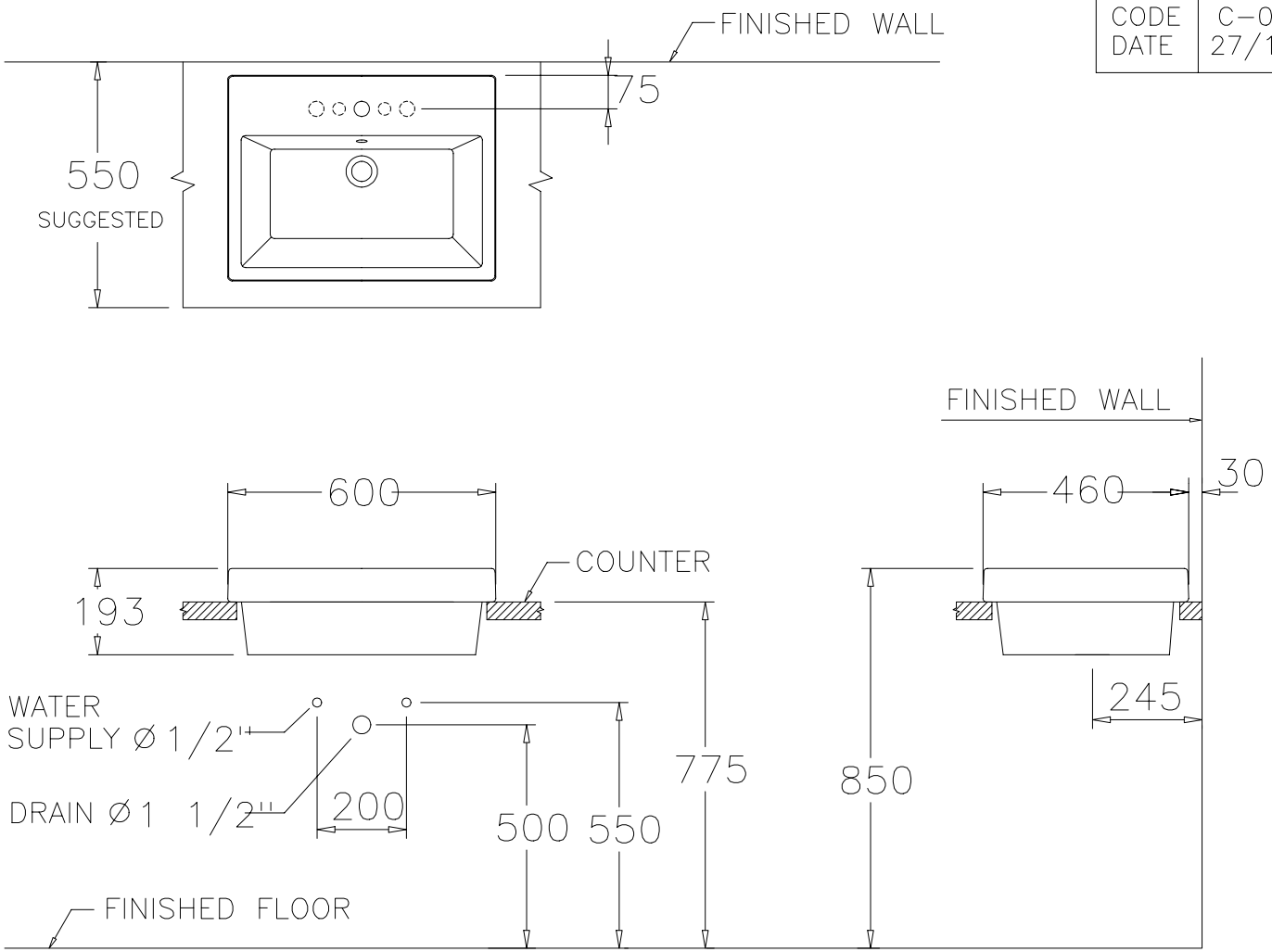DRAWING FOR CATALOG	
NAME	QUADO 60
CODE	C-0902
DATE	27/11/50