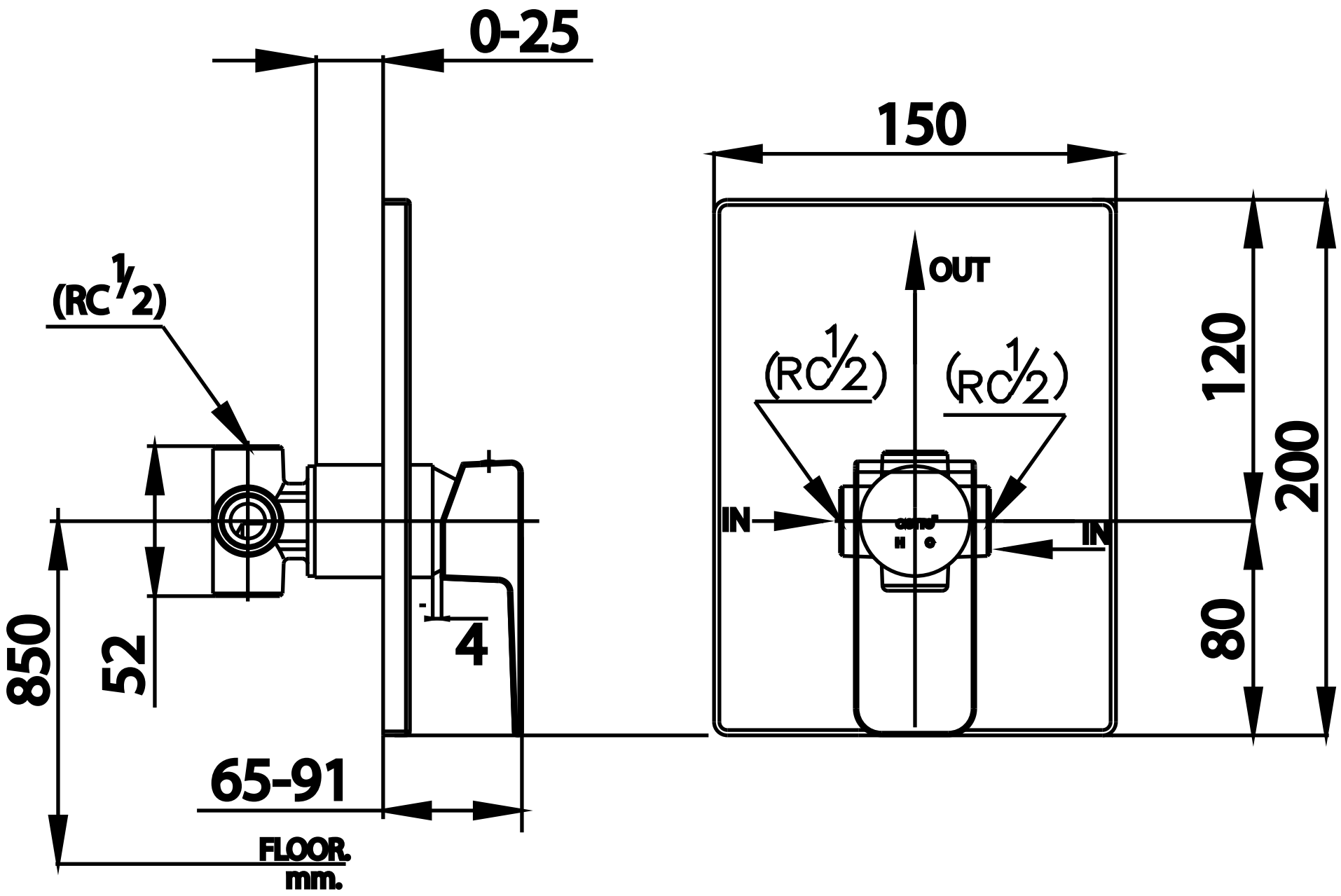

CONCEALED SINGLE LEVER VALVE MIXER
CT 2193A