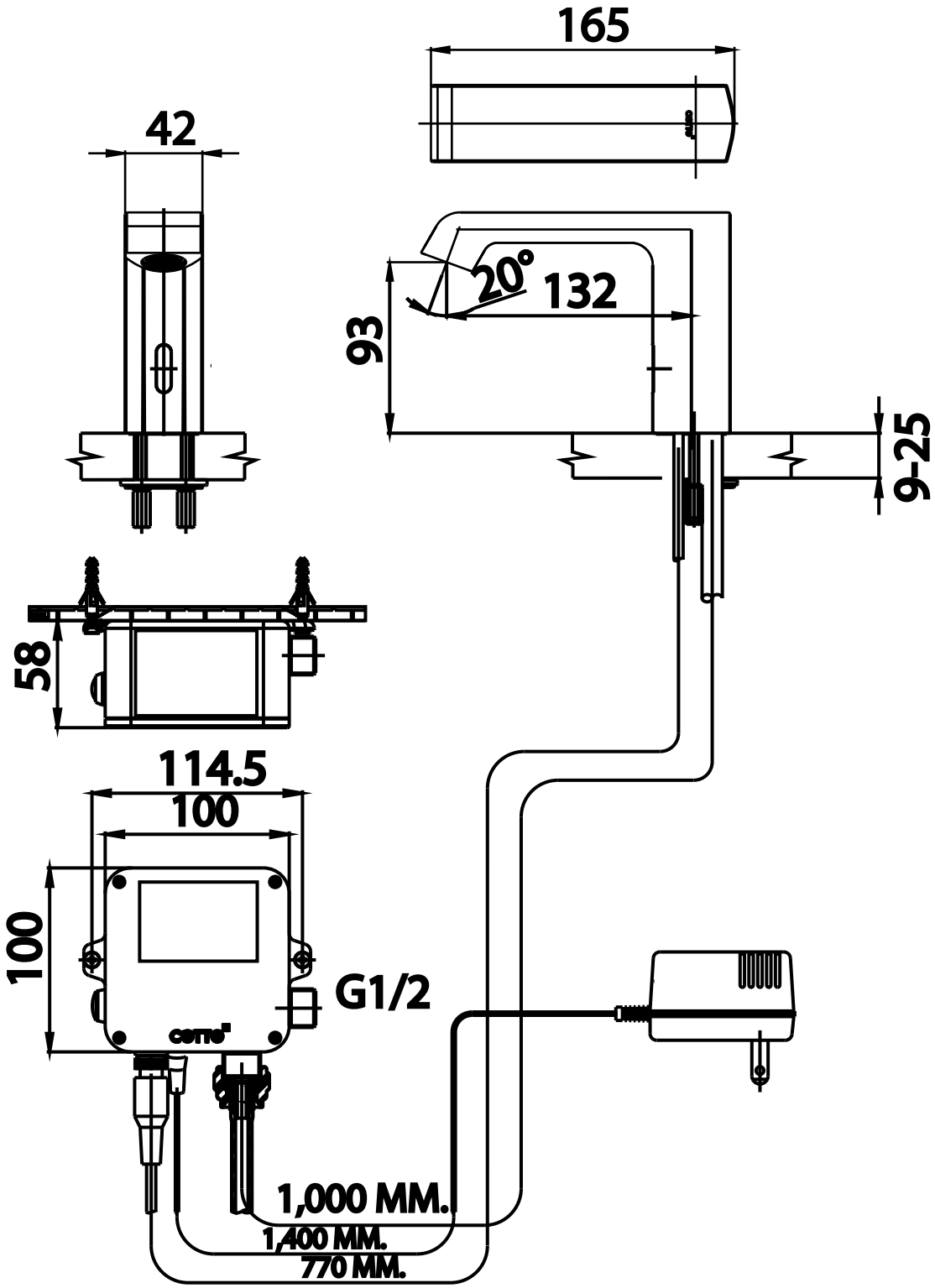

AUTOMATIC FAUCET (Cold water)

CT 4901 AC