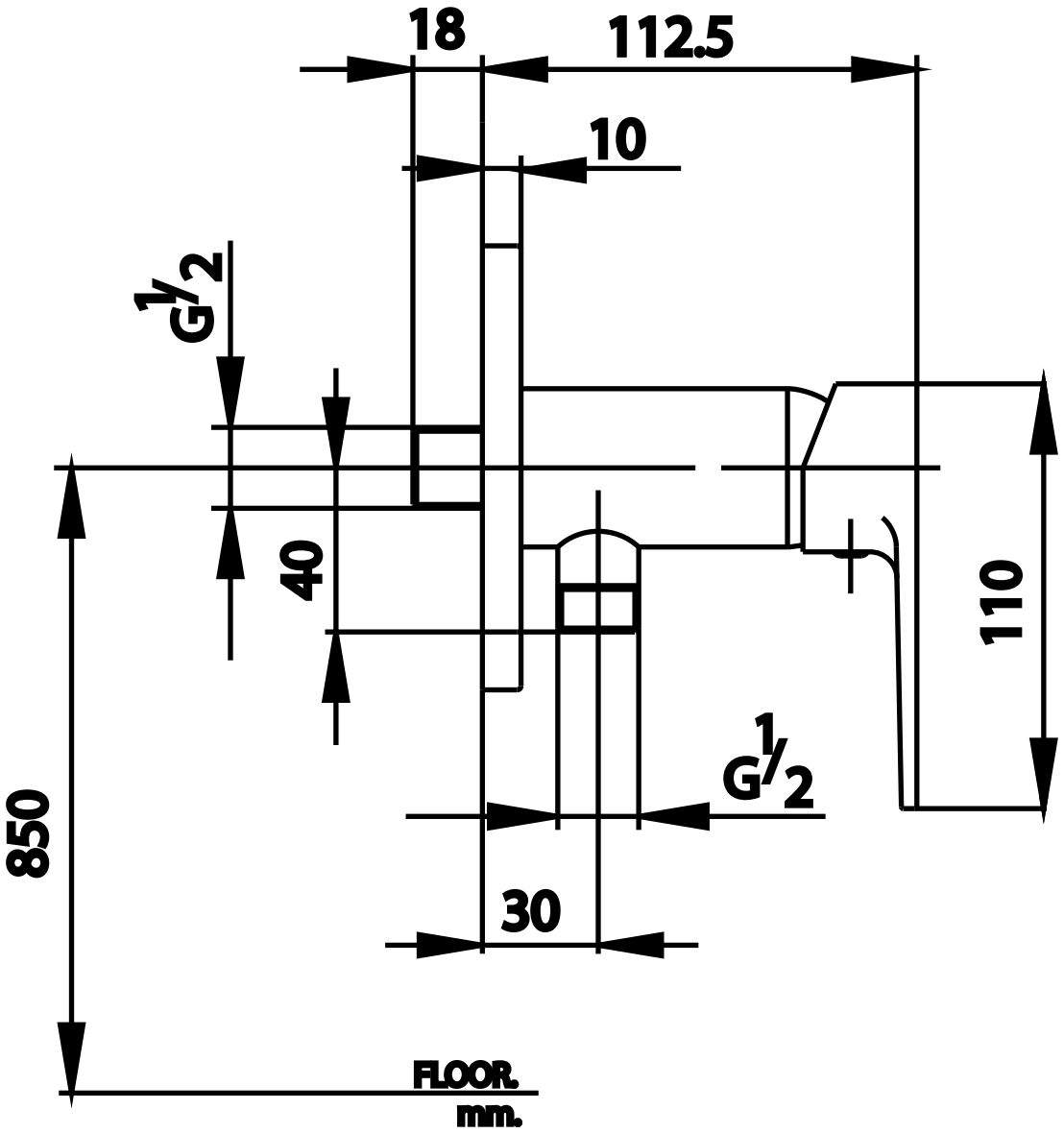

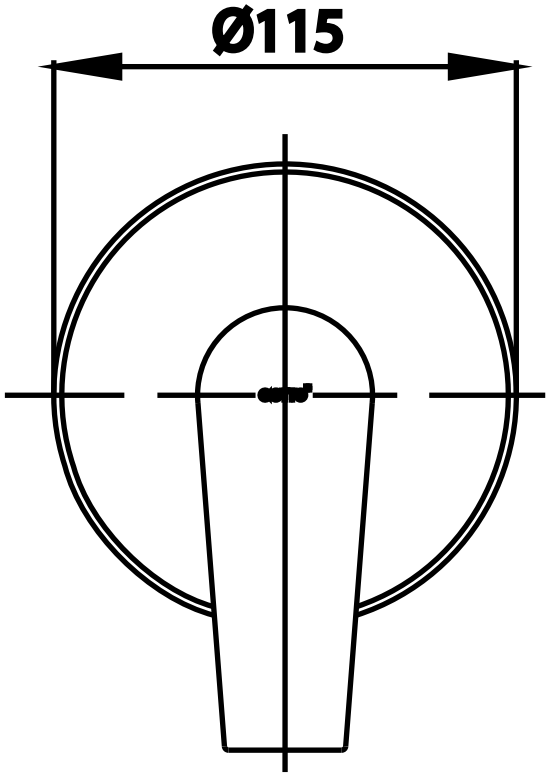

LEVER HANDLE STOP VALVE

Unit : m.m.

CT1161A